MaxMotion

PERFORMANCE DATA SHEET

Meets or exceeds MEPS (Minimum Efficiency Performance Standards), as described by the US Department of Energy in docket 10CFR431 and Natural Resources Canada's Amendment 14

Catalogue #: MQRP-202CH

HP	kW	Voltage	S.F. @ 60Hz	Efficiency	Power Factor	Frame	Design	L.R. Amps
2	1,49	230 / 460	1,15	85,5%	0,870	56HC	B	25

60 Hz								
FLA							Code	F.L. RPM
208	230	416	460	480	575	600		
/	5,05	/	2,53	/	/	/	L	3500

50 Hz								
HP	kW	FLA		S.F. @ 50Hz	Efficiency	Power Factor	Code	F.L. RPM
		190	380					
1,5	1,119	5,0	2,5	1,15	84,0%	0,81	L	2870

Wgt. Lbs	PH	Duty	Insul. Class	Amb.	Elevation	Temp. Rise° C
32	3	Cont.	F	40°C	1000M (3300 Ft)	56

% Efficiency		% Power Factor		Torque			
Full Load:	85,5%	Full Load:	0,87	Full Load Ft/Lbs	3,0	Winding Resist. Ω	Safe Cold Start (Secs)
3/4 Load:	86,2%	3/4 Load:	0,82	Locked Rotor %	388		
1/2 Load:	84,0%	1/2 Load:	0,74	Break Down %	419	1,59 / 6,25	12

Rotor Inertia Wk2 Lb-Ft2	Max Load Inertia Wk2 Lb-Ft2	Shaft Material	Frame Material	DE Bracket Type	ODE Bracket Type	Enclosure	NEMA Rating	Lead Wire Size
/	/	Steel	Rolled Steel	Aluminium Alloy		TEFC	IP55	14AWG

Ball Bearings		Grease	Mount Type	Orientation	Paint	Sound Pressure @ 3FT	Sound Power
DE	ODE						
6205	6203	Sealed Bearings	Rigid	Horizontal	Black	58	/

Inverter Duty. Motor meets MG1 parts 31.4.4.2	Constant Torque Range	Variable Torque Range	Constant HP RPM
	10:1	20:1	5400

WIRING CONNECTION DIAGRAM : A

56 - 56C, Dual Voltage, DOL, 9 Leads WYE Connection
230 / 460 VAC



Max Motion

Date: 2024-05-01
Customer:
Contact:
Submittee: J.C. Lavallée

Catalogue #: MQRP-202CH

Meets or exceeds MEPS (Minimum Efficiency Performance Standards), as described by the US Department of Energy in docket 10CFR431 and Natural Resources Canada's Amendment 14

HP	VAC	RPM	Enclosure	Frame	Frequency	Design	Poles	LR Code Letter	Insulation Class	Temp. Rise °C
2	460	3500	TEFC	56HC	60	B	2	L	F	56

	0Hz	6Hz	15Hz	30Hz	45Hz	60Hz	75Hz	90Hz	105Hz	120Hz
Amps	2,53	2,53	2,53	2,53	2,53	2,53	2,53	2,53	2,53	2,53
RPM	0	350	875	1750	2625	3500	4375	5250	6125	7000
Torq ft.lb	2,40	2,40	3,00	3,00	3,00	3,00	2,40	2,00	1,71	1,50
Peak Tq ft.lb	4,64	9,29	9,29	9,29	9,29	9,29	7,43	6,19	5,31	4,64
HP	0	0,2	0,5	1,0	1,5	2,0	2,0	2,0	2,0	2,0

	Locked Rotor	Pull-Up	Breakdown	Rated Load	Idle	Duty	S. F.	Ambient	Elevation	dBA @ 1M
Speed (RPM)	0,0	1512	2880	3500	3600	Continuous	1,15	40°C	3,300 ft	58
Current (Amps)	25,0	21,3	14,9	2,5	1,0	VFD Rating: Meets MG1 parts 31.4.4.2				
Torque (ft-lbs)	11,6	9,9	12,6	3,0	0,0	C.T.	10:1	V.T.	20:1	

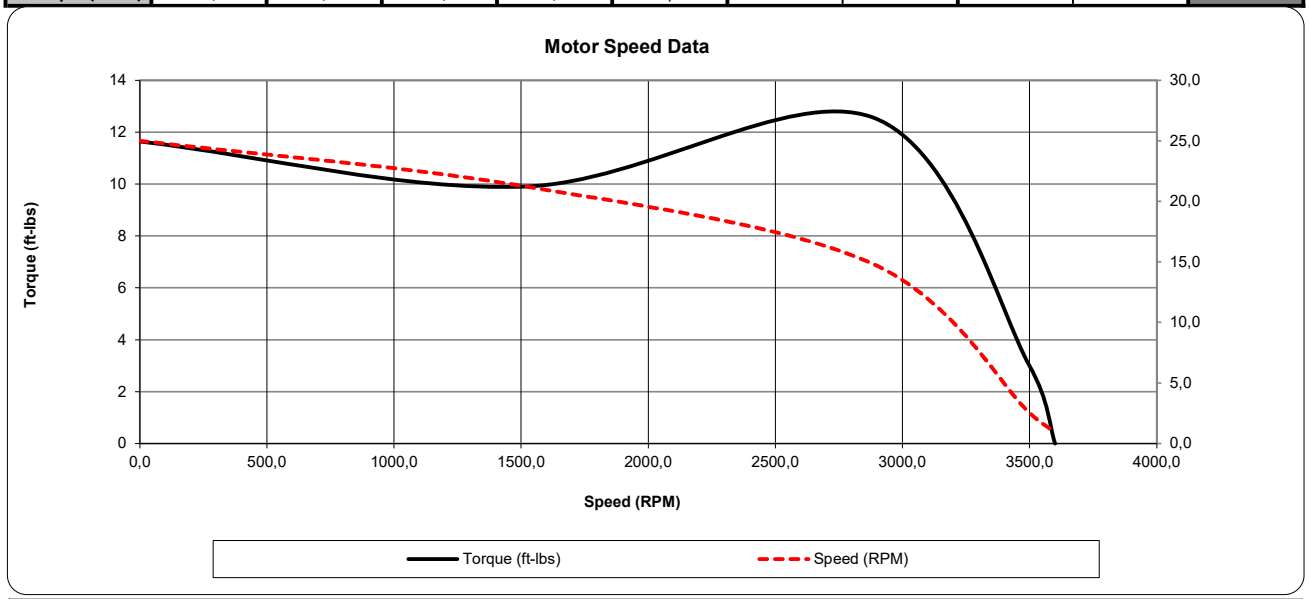

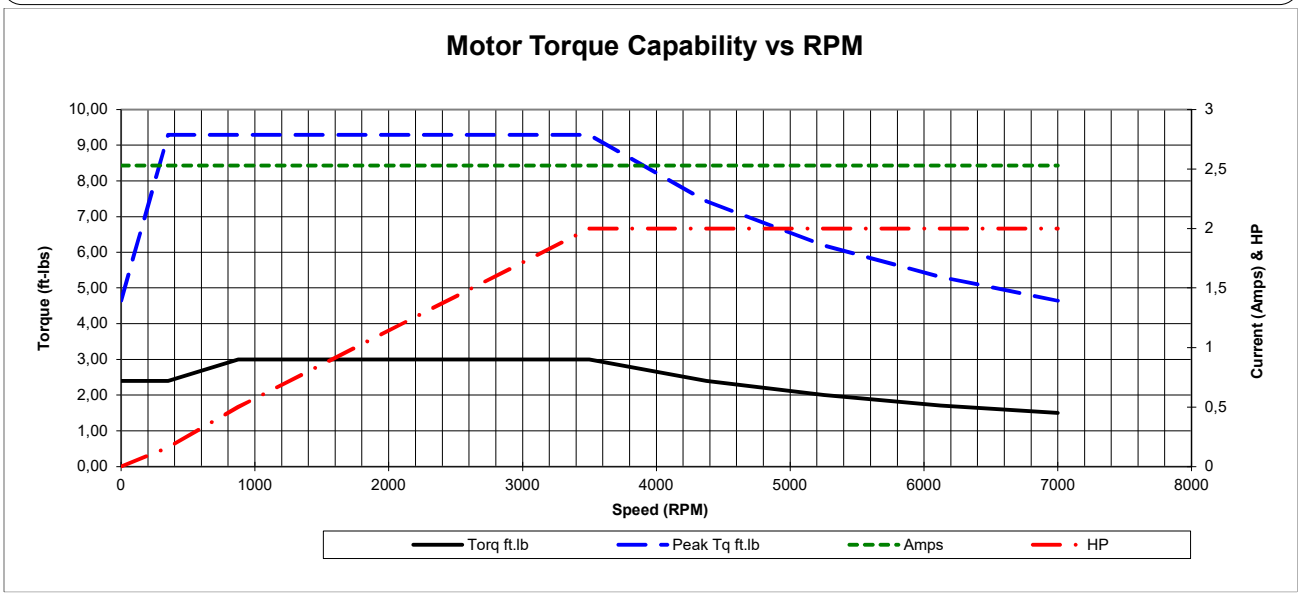

Date: 2024-05-01
Customer:
Contact:
Submittee: J.C. Lavallée

Catalogue #: MQRP-202CH

Meets or exceeds MEPS (Minimum Efficiency Performance Standards), as described by the US Department of Energy in docket 10CFR431 and Natural Resources Canada's Amendment 14

HP	VAC	RPM	Enclosure	Frame	Frequency	Design	Poles	LR Code Letter	Insulation Class	Temp. Rise °C
2	460	3500	TEFC	56HC	60	B	2	L	F	56

Load %	0%	25%	50%	75%	100%	125%	150%
Amps	0,95	1,25	1,51	1,99	2,53	3,16	3,80
Torq ft/lbs	0	0,73	1,48	2,23	3,00	3,78	4,57
RPM	0	3575	3550	3525	3500	3475	3450
Eff	0	74,91	83,80	86,24	85,50	83,41	81,03
PF	0	50,0	74	82	87,0	88,7	91,4

	Locked Rotor	Pull-Up	Breakdown	Rated Load	Idle	Duty	S. F.	Ambient	Elevation	dBA @ 1M
Speed (RPM)	0	1512	2880	3500	3600	Continuous	1,15	40°C	3,300 ft	58
Current (Amps)	25	21,3	14,9	2,53	0,954	VFD Rating: Meets MG1 parts 31.4.4.2				
Torque (ft-lbs)	11,64	9,90	12,57	3,00	0,0	C.T.	10:1	V.T.	20:1	

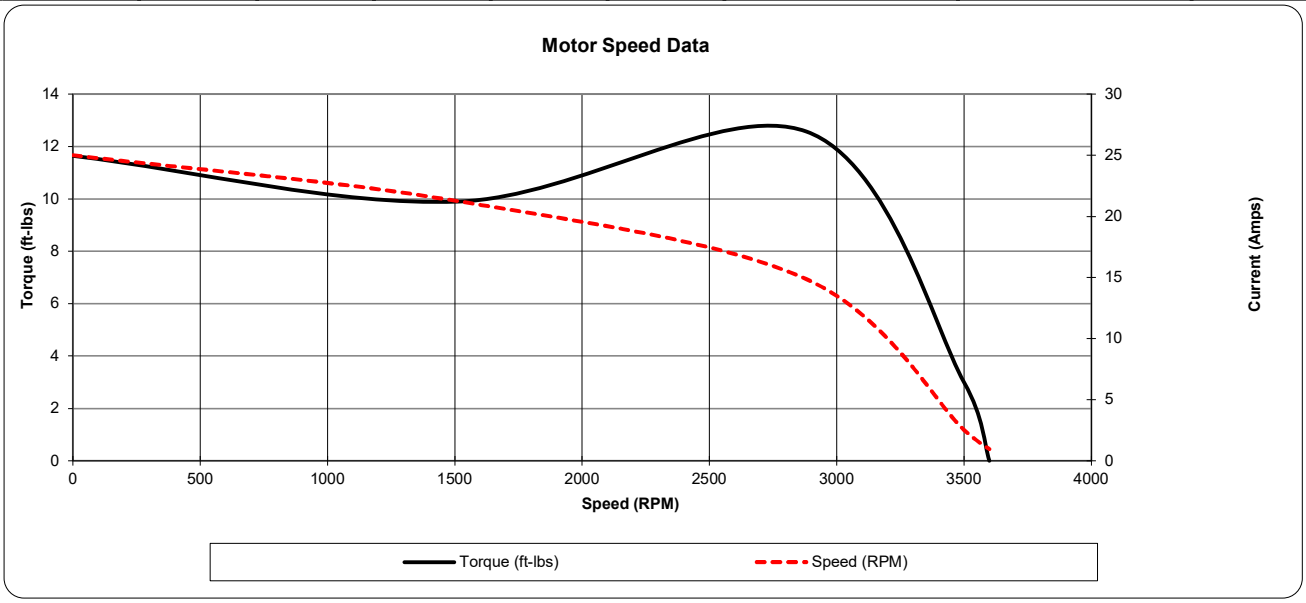

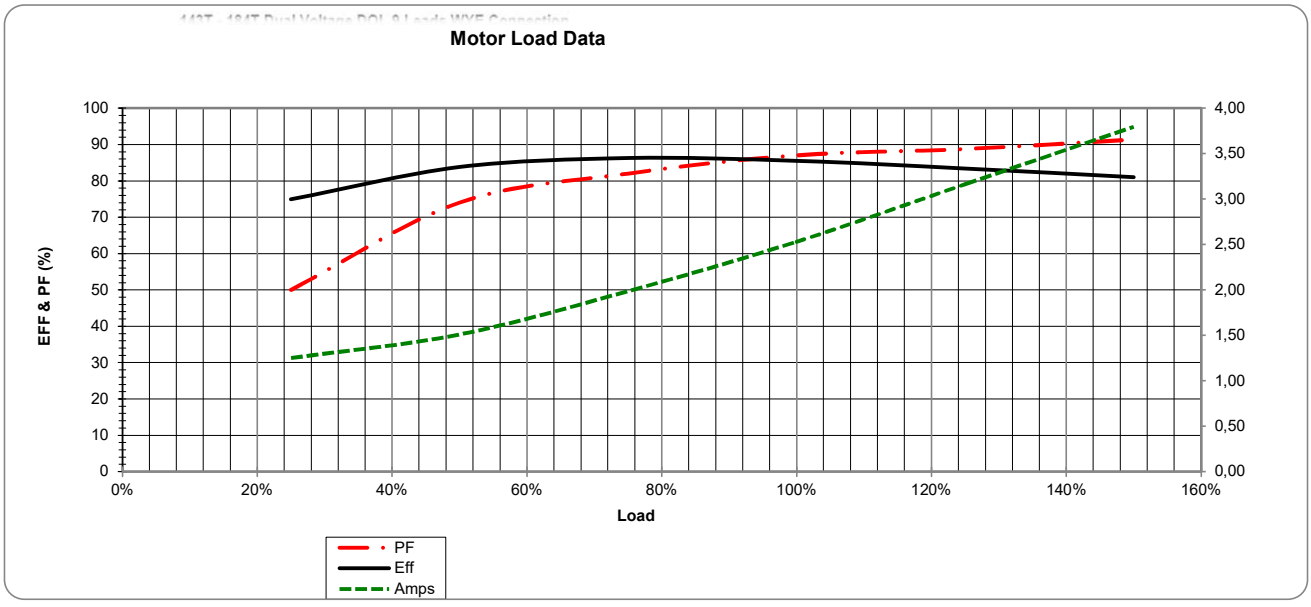

MaxMotion

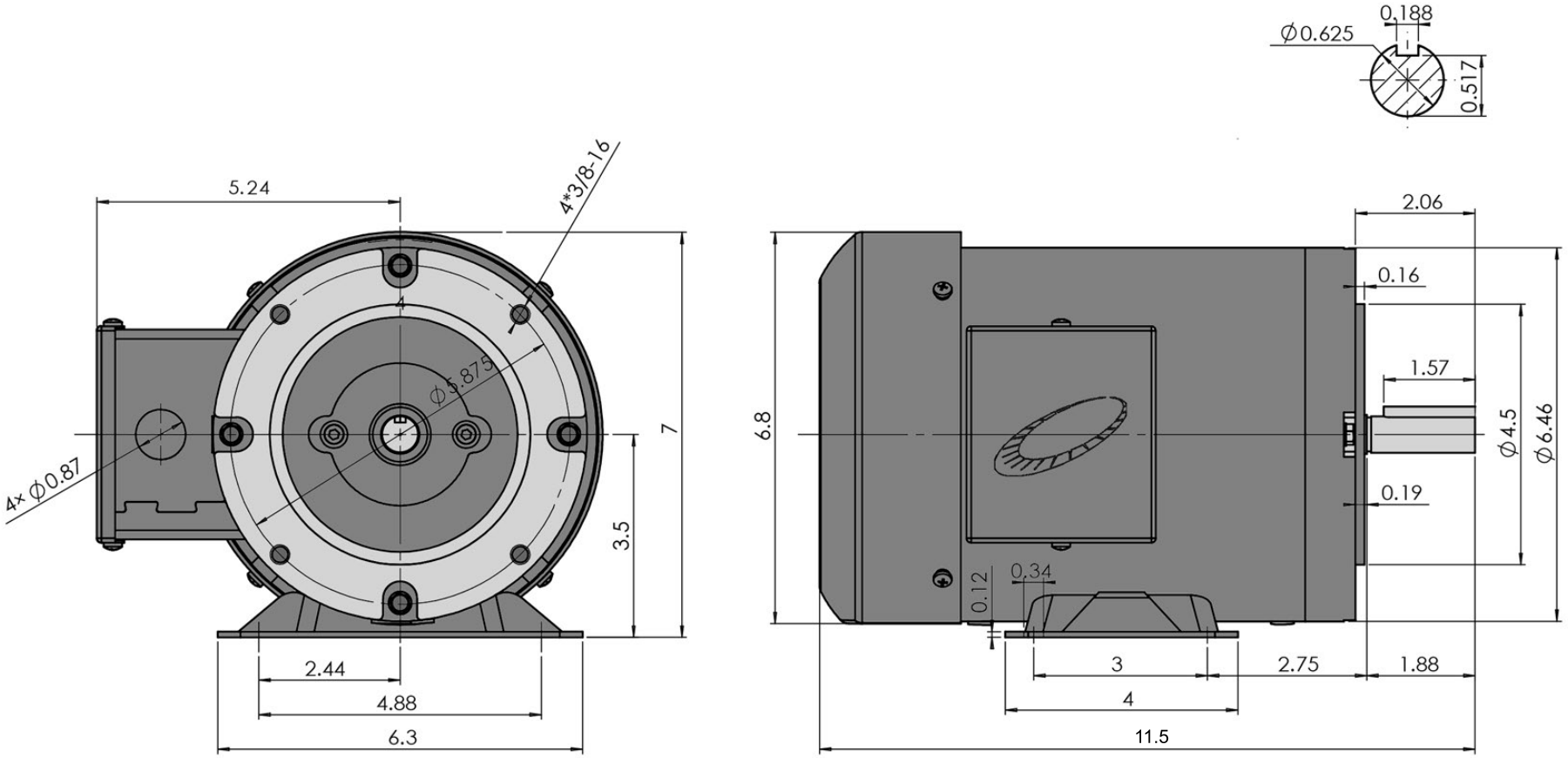

Version:2HUA	Revised: July 2020	HP	RPM	FRAME	ENCLOSURE
Customer is responsable in determining that MaxMotion product will fit/perform suitably in the intended application		2	3600	56C	TEFC

MQRP-202CH

THREE PHASE 56HC AC MOTORS

HEAVY GAUGE ROLLED STEEL CONSTRUCTION

TEFC TOTALLY ENCLOSED FAN COOLED

MaxMotion

Applications:

A versatile design allowing replacement of C-Face or rigid base TEFC motors, for use on gear reducers, pumps, fans, blowers, conveyors, and all agricultural equipment requiring a motor to meet demanding high starting torque applications in severe environmental conditions.

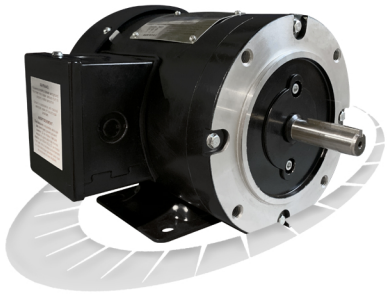

Features:

Design - NEMA Standard MG-1, design B, ambient temperature of 40°C, altitude 1000M, temperature rise B.

Agency Listings and Standard - NEMA MG1, IEEE, IEC, DOE registered, NRCan, CSAus and CSA Certified, CE and RoHS Compliant

Service Factor - 1.15

Electrical Supply - 3 phase, 230/460VAC, 575VAC @ 60 hz, 3 phase 190/380VAC @ 50 Hz rated to the next lower HP. (± 10% Voltage tolerance)

Windings - Highest quality Corona resistant, Inverter duty copper wire. VPI impregnated with additional dip and bake.

Efficiency - Integral HP models meet or exceed NEMA Premium efficiency levels.

Insulation - Class F insulation, with non-hydroscopic motor leads.

Bearings - Permanently Lubricated High quality Double Shielded Ball Bearings with oversized DE bearings. Lithium based grease operating temperature range – 25° through 175°C.

Enclosure Protection -Totally Enclosed Fan Cooled meeting IEC standard IP55. Factory Certified Division 2 Class I Groups A, B, C, D Class II Groups F, G. Meets Temp Code T2B.

Frame Construction - Rolled Steel with cast aluminum end shields.

Conduit Box - With ½ NPT knockouts positioned for wiring access every 90° with rubber gasket between box and motor frame.

Inverter Duty - Constant torque: 10/1 ratio, variable torque: 20/1 ratio

Nameplate - Stainless steel with etched details.

Drain Hole - Positioned in the stator frame at the lowest point, when motors a horizontally mounted.

Fan cover - Plastic fan & heavy duty plastic fan guard

Warranty - 1 year

THREE PHASE 56HC AC MOTORS

HEAVY GAUGE ROLLED STEEL CONSTRUCTION

TEFC TOTALLY ENCLOSED FAN COOLED

Max Motion

HP	FL RPM	VOLTS	FRAME	CAT NO.	CONSTRUCTION	NOM EFF.	F.L. AMPS	CODE	WT (Lbs)	DE BRG	ODE BRG	"C" Dimension (Inch)
0.33	3481	230/460	56C	MQR-132CH	Rolled Steel	67.6	1.31/0.66	L	21	6205	6203	10.7
	3470	575	56C	MPR-132CH	Rolled Steel	62.8	0.57	L	21	6205	6203	10.7
	1744	230/460	56C	MQR-134CH	Rolled Steel	66.1	1.63/0.82	L	22	6205	6203	10.7
	1750	575	56C	MPR-134CH	Rolled Steel	69.2	0.58	L	22	6205	6203	10.7
0.5	3466	230/460	56C	MQR-122CH	Rolled Steel	71.6	1.67/0.84	L	21	6205	6203	10.7
	3471	575	56C	MPR-122CH	Rolled Steel	69.3	0.672	L	21	6205	6203	10.7
	1741	230/460	56C	MQR-124CH	Rolled Steel	74.1	1.95/0.98	L	24	6205	6203	10.7
	1753	575	56C	MPR-124CH	Rolled Steel	77.1	0.71	L	24	6203	6203	10.7
0.75	3469	230/460	56C	MQR-342CH	Rolled Steel	80.3	2.08/1.04	L	22.5	6205	6203	10.7
	3474	575	56C	MPR-342CH	Rolled Steel	76.2	0.86	L	22.5	6205	6203	10.7
	1738	230/460	56C	MQR-344CH	Rolled Steel	80.7	2.34/1.18	L	25.3	6205	6203	10.7
	1744	575	56C	MPR-344CH	Rolled Steel	80.5	0.91	L	25.3	6205	6203	10.7
1	3506	230/460	56C	MQRP-102CH	Rolled Steel	82.7	2.75/1.38	L	25	6205	6203	10.7
	3510	575	56C	MPRP-102CH	Rolled Steel	80.7	1.14	L	25	6205	6203	10.7
	1752	230/460	56C	MQRP-104CH	Rolled Steel	86.5	2.82/1.41	L	27	6205	6203	10.7
	1756	575	56C	MPRP-104CH	Rolled Steel	85.6	1.14	L	27	6205	6203	10.7
1.5	3492	230/460	56C	MQRP-152CH	Rolled Steel	86.6	3.81/1.9	L	28	6205	6203	10.7
	3478	575	56C	MPRP-152CH	Rolled Steel	85.1	1.61	L	28	6205	6203	10.7
	1752	230/460	56C	MQRP-154CH	Rolled Steel	86.6	4.41/2.21	L	31	6205	6203	11.5
	1745	575	56C	MPRP-154CH	Rolled Steel	86.7	1.65	L	31	6205	6203	11.5
2	3500	230/460	56C	MQRP-202CH	Rolled Steel	85.5	5.05/2.53	L	32	6205	6203	11.5
	3502	575	56C	MPRP-202CH	Rolled Steel	86	2.03	L	32	6205	6203	11.5
	1741	230/460	56HC	MQRP-204CH	Rolled Steel	87.1	5.43/2.74	L	37	6205	6203	12.5
	1752	575	56HC	MPRP-204CH	Rolled Steel	87.6	2.15	L	37	6205	6203	12.5
3	3513	230/460	56HC	MQRP-302CH	Rolled Steel	87.6	7.18/3.54	L	42	6205	6203	12.5
	3512	575	56HC	MPRP-302CH	Rolled Steel	87.6	3.05	L	42	6205	6203	12.5
5	3522	230/460	56HC	MQRP-502CH	Rolled Steel	88.7	11.88/5.883	L	42	6205	6203	13.5
	3522	575	56HC	MPRP-502CH	Rolled Steel	88.7	5.883	L	42	6205	6203	13.5